NEWLINE for a lifetime!

DryFit 1000x1000 2S

Spec Drawings

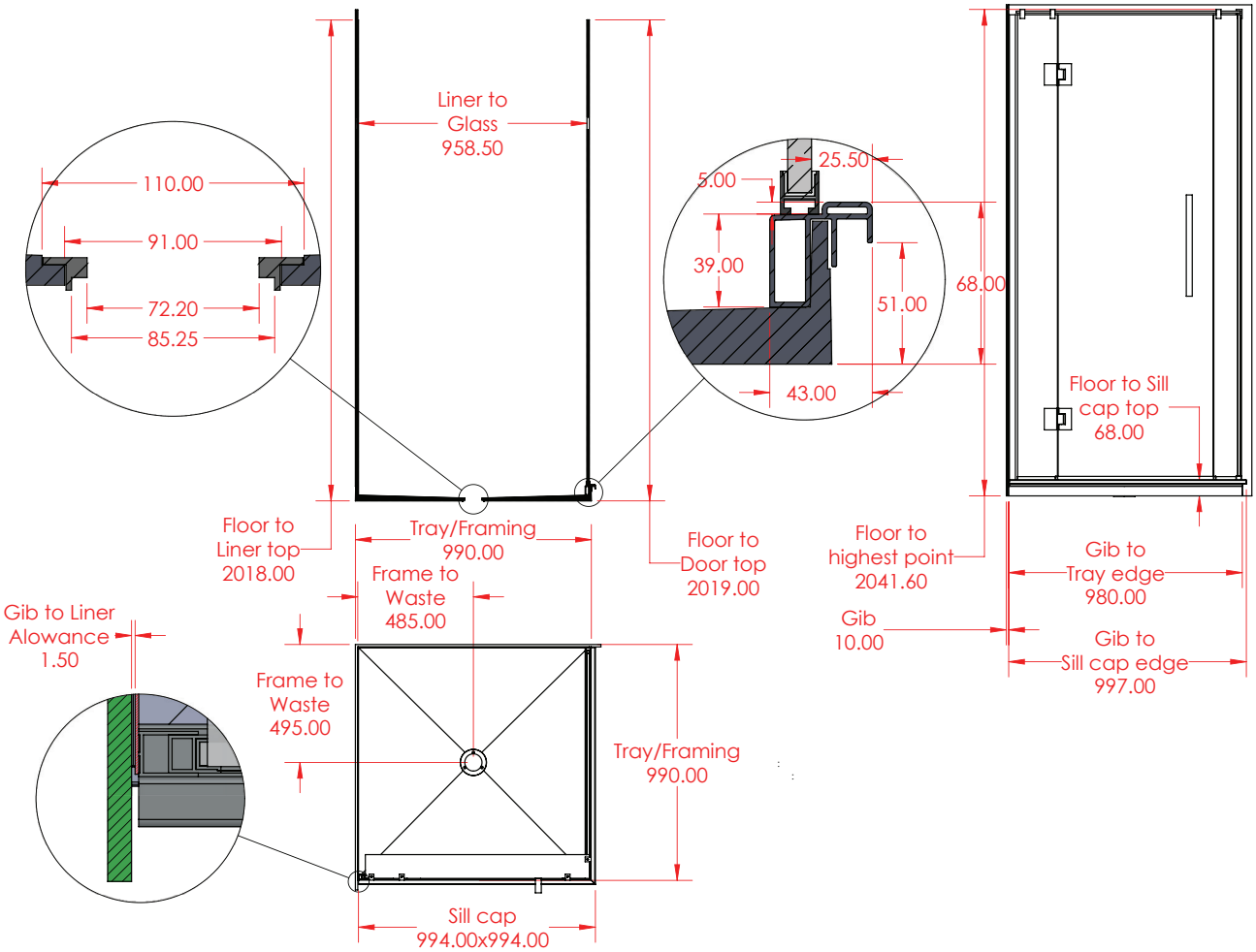

NEWLINE for a lifetime!

DryFit 1000x1000 2S

Spec Drawings

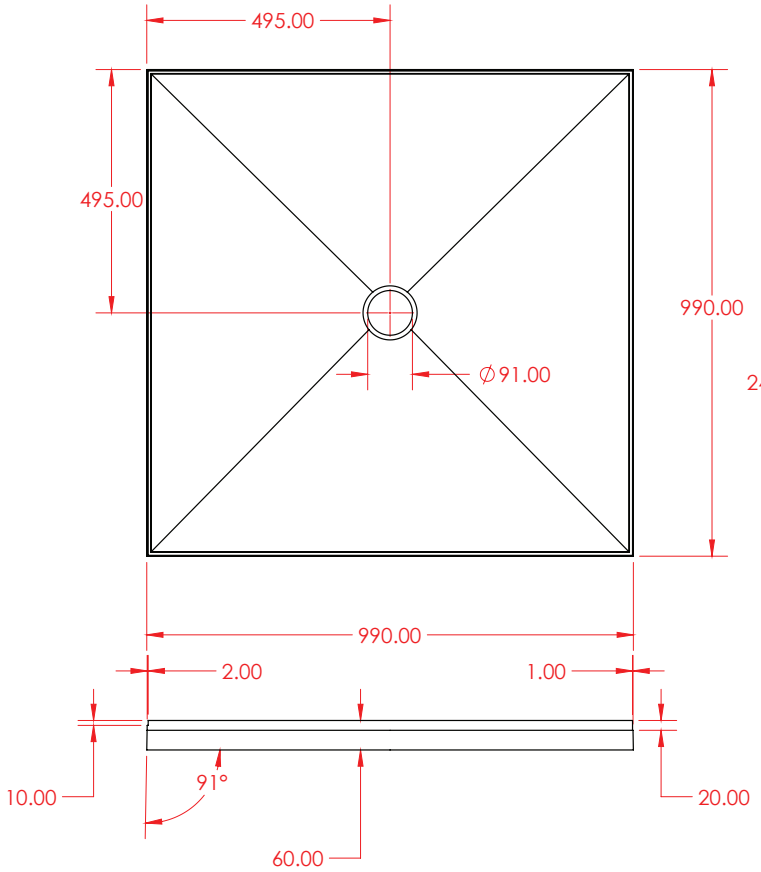

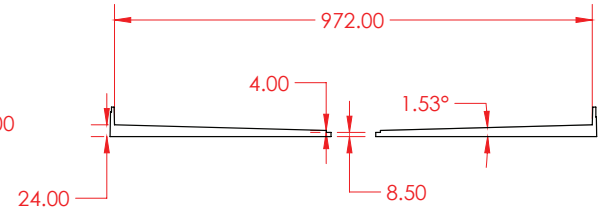

NEWLINE for a lifetime!

DryFit 1000x1000 2S

Spec Drawings

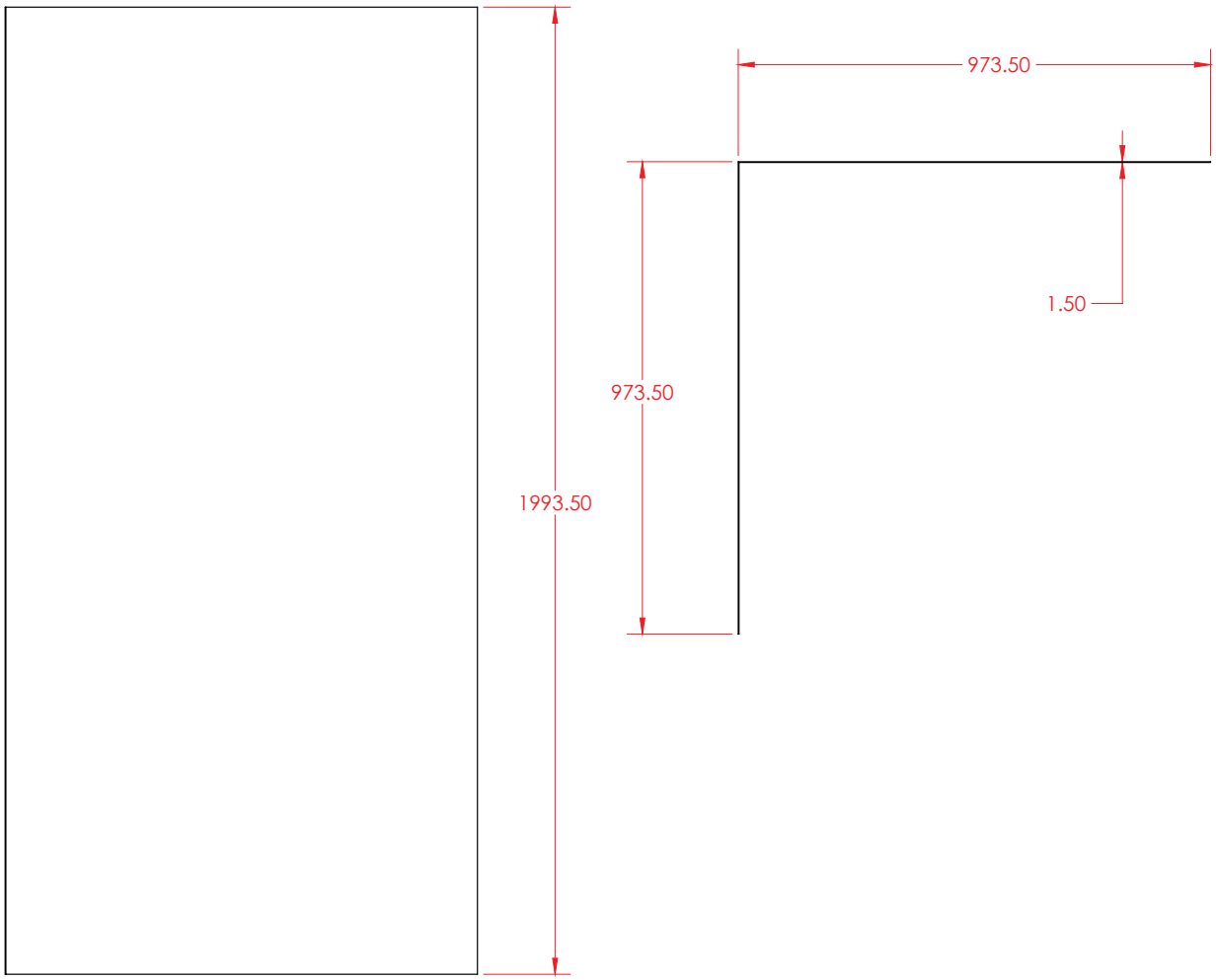

DryFit 1000x1000 2S

Spec Drawings

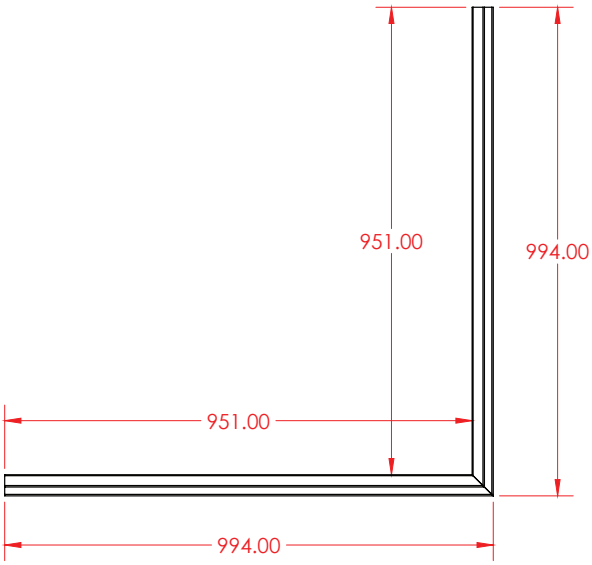

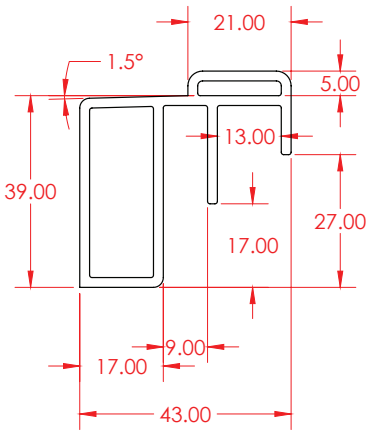

DryFit 1000x1000 2S

Spec Drawings

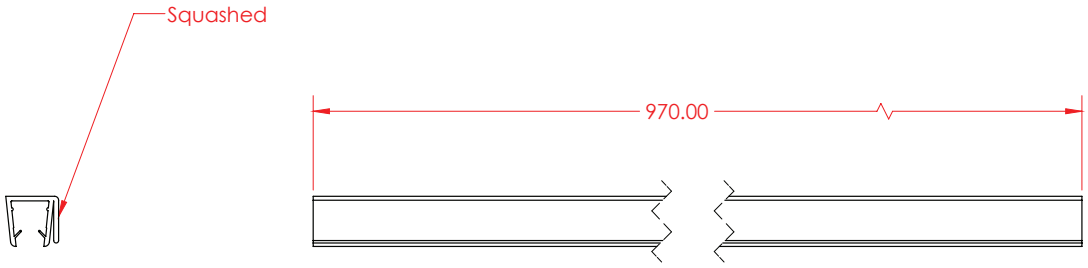

NEWLINE for a lifetime!

DryFit 1000x1000 2S
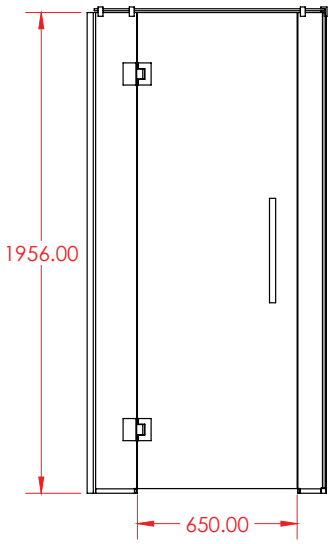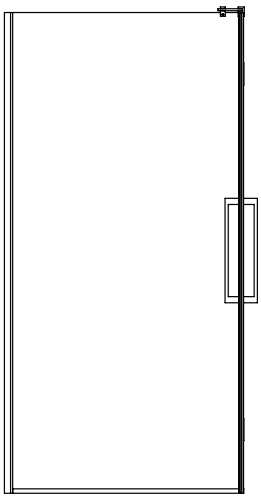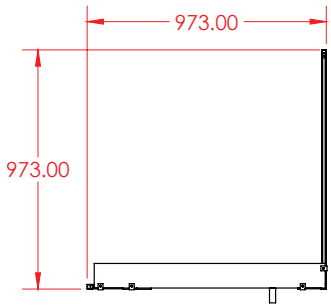
Spec Drawings