NEWLINE for a lifetime!

DryFit 900x900 3S

Spec Drawings

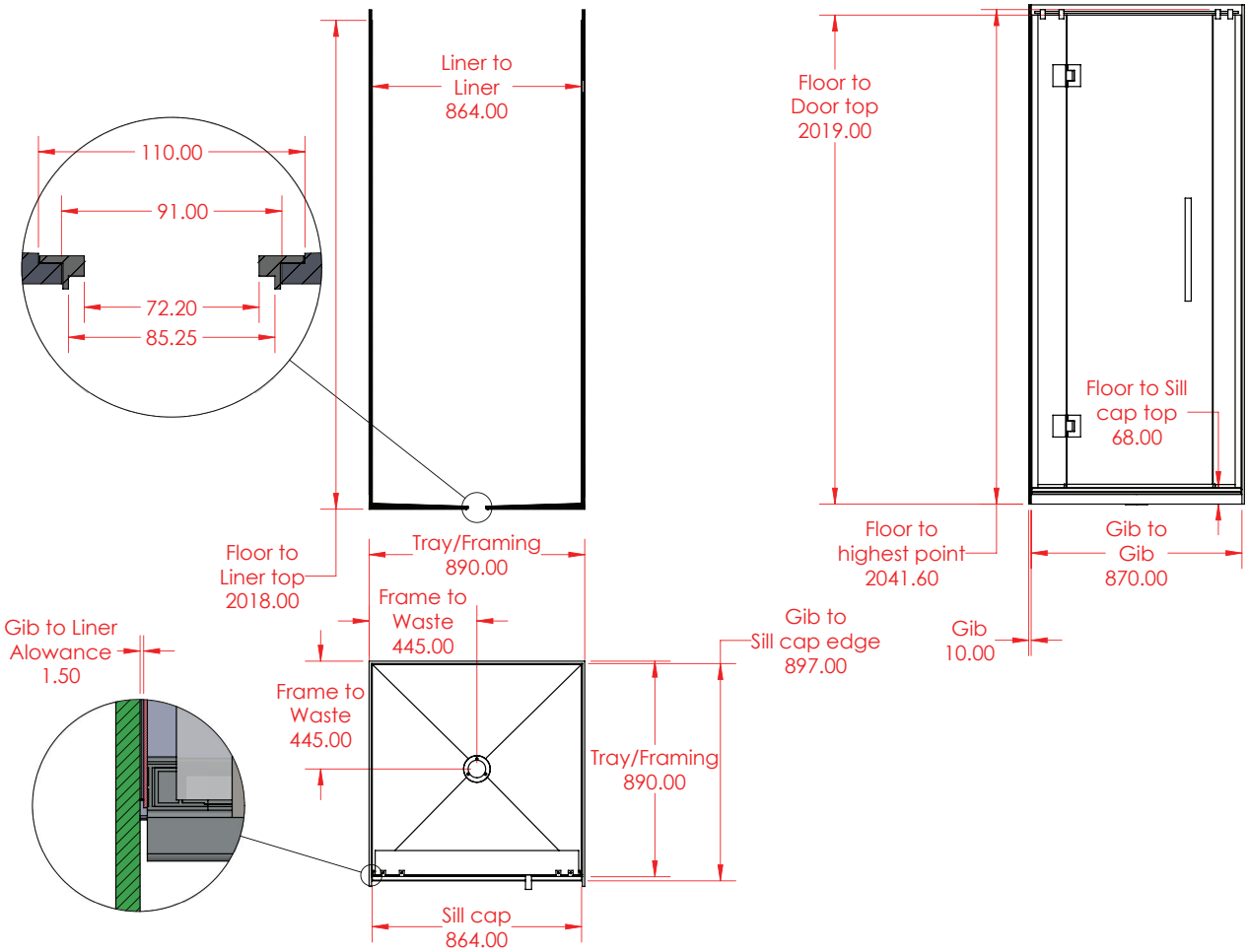

NEWLINE for a lifetime!

DryFit 900x900 3S

Spec Drawings

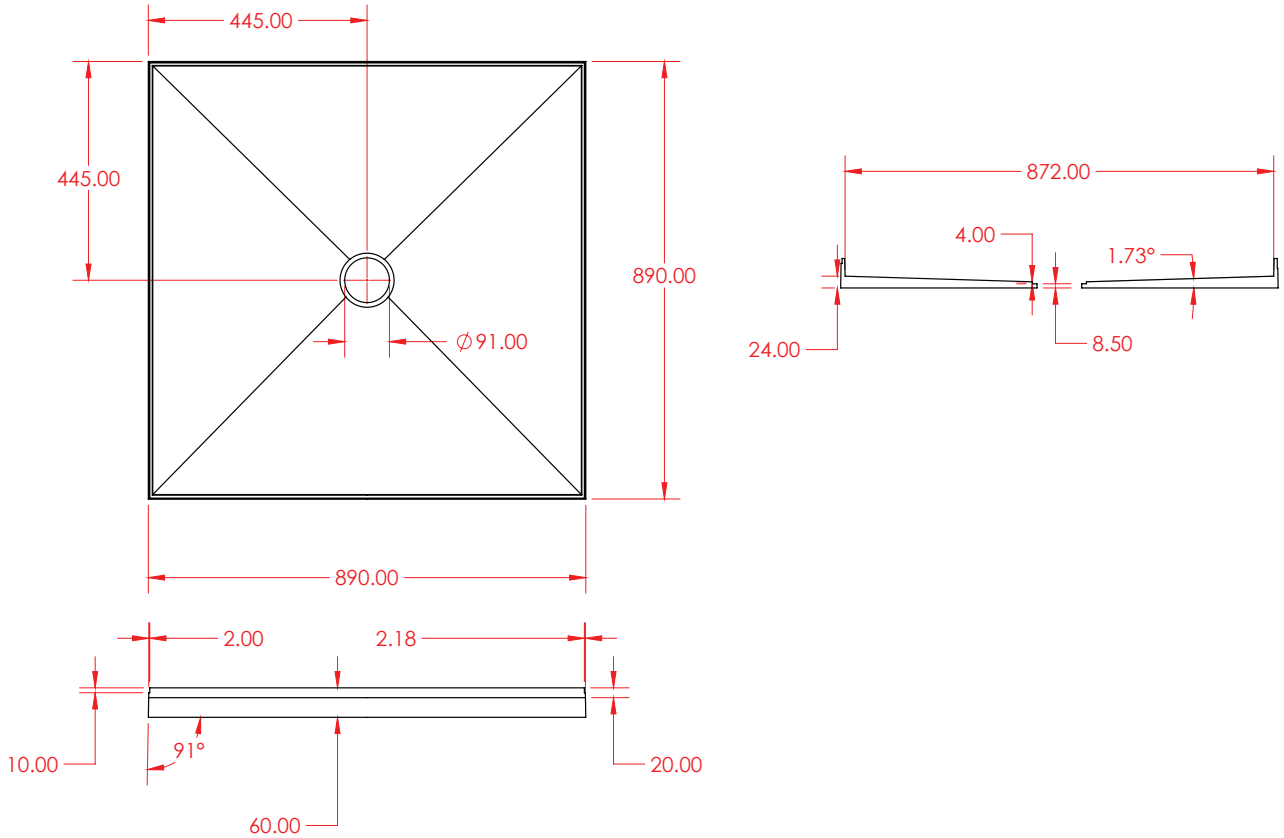

NEWLINE for a lifetime!

DryFit 900x900 3S

Spec Drawings

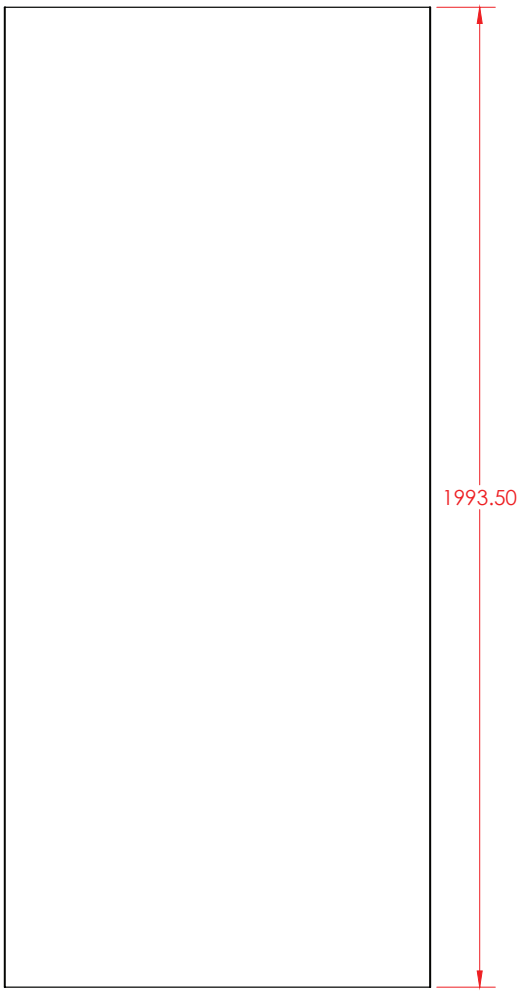

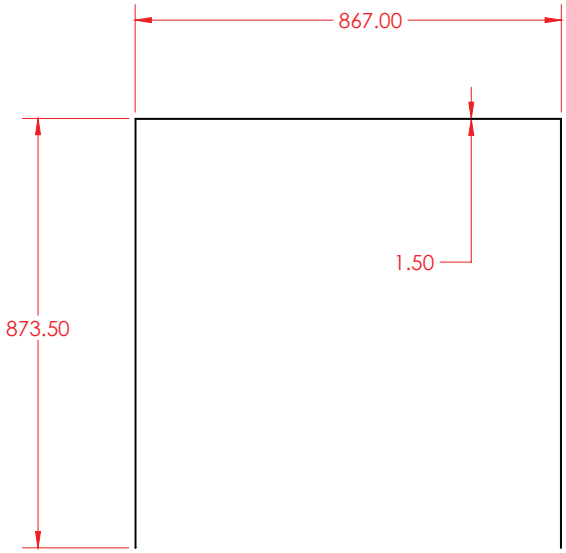

DryFit 900x900 3S

Spec Drawings

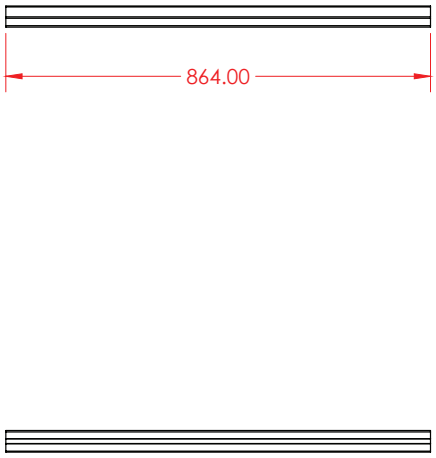

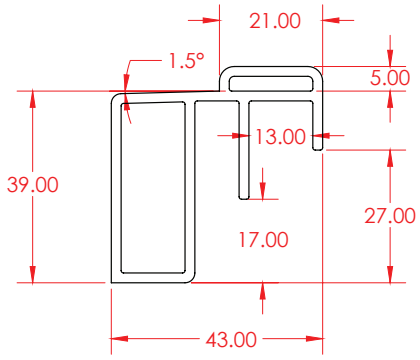

DryFit 900x900 3S

Spec Drawings

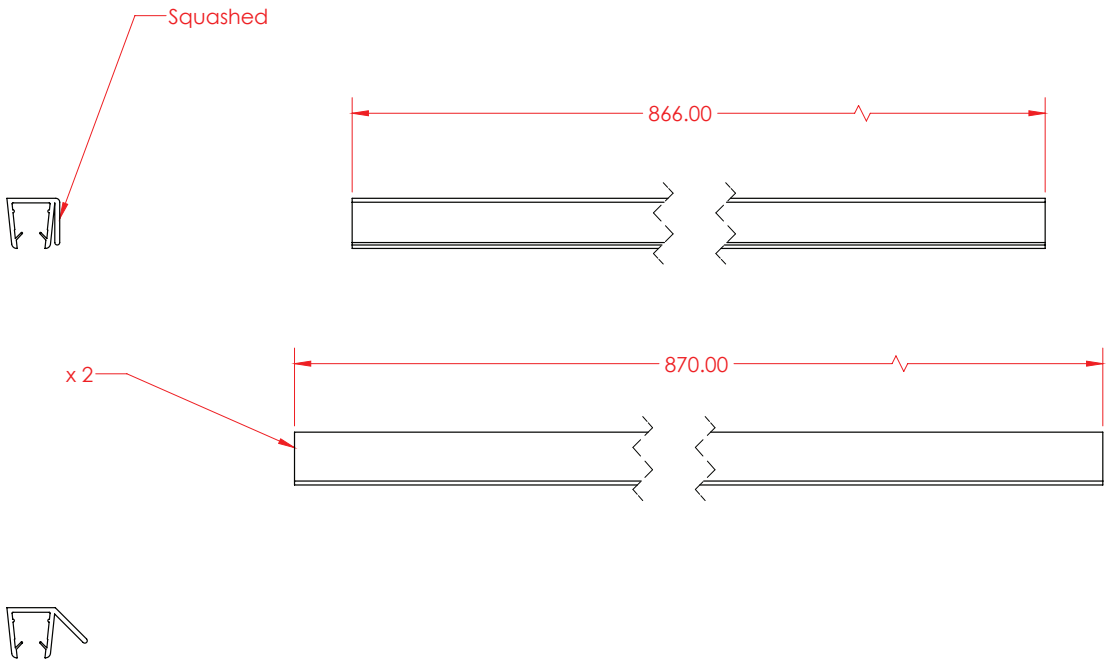

DryFit 900x900 3S
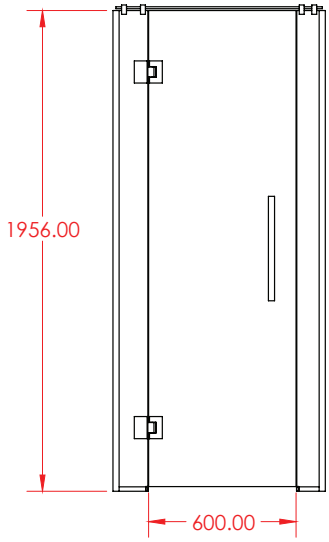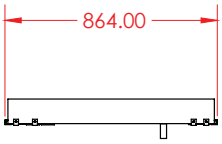
Spec Drawings